RB
RESIN
BOND

QUALITY, RELIABLE, CONSISTENT

High Quality Diamond and CBN

THINWHEELS™

DIACUT
THINWHEEL™

719-481-4205 · fax 719-488-0872 · **sales@diacut.com** · www.diacut.com

A LEADING MANUFACTURER OF **DIAMOND AND CBN BLADES**

P.O. Box 217, 773 Hwy. 105, Palmer Lake, CO 80133
phone: **719-481-4205** fax: 719-488-0872
email: **sales@diacut.com** web: www.diacut.com

RB RESIN BOND

3" DIAMETER SERIES

RESIN BOND Diamond and CBN

Slotting • Slicing • Dicing • Cut-off

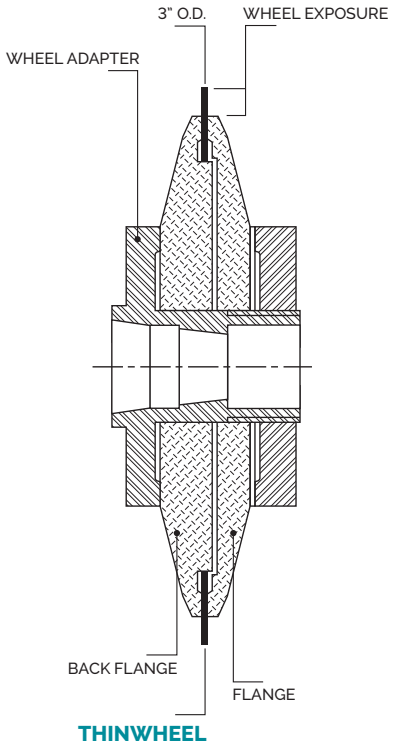

OUTSIDE DIAMETER: 3" INSIDE DIAMETER: 1.75"

Thinwheels available in thickness from .004"–.250" in increments of .001" or a fraction thereof.

Thickness Tolerance: Standard +.0/–.0004" Special +.0/–.0002"

SUPERABRASIVE SOLID TO HOLE

WHEEL THICKNESS	TOLERANCE	DIAMOND	CBN
.004"-.006"	Special	$ 158.00	NA
.007"-.009"	Standard	$ 140.00	$ 151.00
	Special	$ 147.00	$ 159.00
.010"-.025"	Standard	$ 116.00	$ 134.00
	Special	$ 124.00	$ 141.00
.026"-.050"	Standard	$ 131.00	$ 164.00
	Special	$ 139.00	$ 172.00
.051"-.075"	Standard	$ 146.00	$ 191.00
	Special	$ 154.00	$ 197.00
.076"-.100"	Standard	$ 161.00	$ 213.00
	Special	$ 168.00	$ 220.00
.101"-.125"	Standard	$ 173.00	$ 235.00
	Special	$ 181.00	$ 242.00
.126"-.150"	Standard	$ 184.00	$ 255.00
	Special	$ 192.00	$ 261.00
.151"-.175"	Standard	$ 196.00	$ 268.00
	Special	$ 205.00	$ 277.00
.176"-.200"	Standard	$ 207.00	$ 281.00
	Special	$ 214.00	$ 289.00
.201"-.225"	Standard	$ 216.00	$ 290.00
	Special	$ 224.00	$ 296.00
.226"-.250"	Standard	$ 224.00	$ 295.00
	Special	$ 231.00	$ 303.00

NOTE: Add 10% for Copper Bond (RLE)

1A8 FLANGES FOR 3" THINWHEEL

A special Diacut flange must be used with the 3" Thinwheel.

PART NO.	DIAMETER	WHEEL EXPOSURE	PRICE
F1A8-385	2.85"	.075"	$79
F1A8-370	2.70"	.150"	$77
F1A8-355	2.55"	.225"	$75
F1A8-340*	2.40"	.300"	$74
F1A8-325*	2.25"	.375"	$73
FS300	Complete set of flanges		$360

Flange thickness for 3" Thinwheel is .400"
Standard hole size for all flanges is 1.25"
Special hole size– add $10
WHEEL EXPOSURE NOT TO EXCEED 15 TIMES THE THICKNESS OF THE BLADE

WHEEL ADAPTERS

Keep grinding wheels mounted for longer wheel life and less dressing time.

WA200–1LH	Wheel adapter O.D. 2–¼"	$60
*WAX200–1LH	Wheel adapter O.D. 1–¾"	$110

PRICES SUBJECT TO CHANGE WITHOUT NOTICE.
EFFECTIVE JANUARY 2023 • VISA/MASTERCARD ACCEPTED

P.O. Box 217, 773 Hwy. 105, Palmer Lake, CO 80133
phone: **719-481-4205** fax: 719-488-0872
email: **sales@diacut.com** web: www.diacut.com

RB RESIN BOND

4" DIAMETER SERIES

RESIN BOND Diamond and CBN

Slotting • Slicing • Dicing • Cut-off

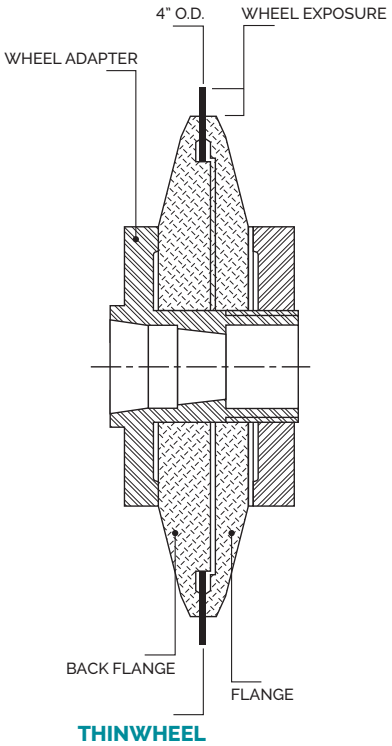

OUTSIDE DIAMETER: 4" INSIDE DIAMETER: 2.75"

Thinwheels available in thickness from .004"–.250" in increments of .001" or a fraction thereof.

Thickness Tolerance: Standard +.0/–.0004" Special +.0/–.0002"

SUPERABRASIVE SOLID TO HOLE

WHEEL THICKNESS	TOLERANCE	DIAMOND	CBN
.004"-.006"	Special	$ 156.00	NA
.007"-.009"	Standard	$ 143.00	$ 153.00
	Special	$ 154.00	$ 162.00
.010"-.025"	Standard	$ 125.00	$ 145.00
	Special	$ 135.00	$ 156.00
.026"-.050"	Standard	$ 145.00	$ 181.00
	Special	$ 156.00	$ 191.00
.051"-.075"	Standard	$ 162.00	$ 214.00
	Special	$ 172.00	$ 224.00
.076"-.100"	Standard	$ 179.00	$ 244.00
	Special	$ 190.00	$ 255.00
.101"-.125"	Standard	$ 192.00	$ 269.00
	Special	$ 202.00	$ 280.00
.126"-.150"	Standard	$ 205.00	$ 291.00
	Special	$ 214.00	$ 301.00
.151"-.175"	Standard	$ 214.00	$ 308.00
	Special	$ 224.00	$ 317.00
.176"-.200"	Standard	$ 223.00	$ 323.00
	Special	$ 233.00	$ 333.00
.201"-.225"	Standard	$ 228.00	$ 333.00
	Special	$ 238.00	$ 343.00
.226"-.250"	Standard	$ 234.00	$ 339.00
	Special	$ 244.00	$ 349.00

NOTE: Add 10% for Copper Bond (RLE)

1A8 FLANGES FOR 4" THINWHEEL

A special Diacut flange must be used with the 4" Thinwheel.

PART NO.	DIAMETER	WHEEL EXPOSURE	PRICE
F1A8-485	3.85"	.075"	$99
F1A8-470	3.70"	.150"	$98
F1A8-455	3.55"	.225"	$97
F1A8-440	3.40"	.300"	$96
F1A8-425	3.25"	.375"	$95
FS400	Complete set of flanges		$470

Flange thickness for 4" Thinwheel is .650"
Standard hole size for all flanges is 1.25"
Special hole size– add $10
WHEEL EXPOSURE NOT TO EXCEED 15 TIMES THE THICKNESS OF THE BLADE

WHEEL ADAPTERS

Keep grinding wheels mounted for longer wheel life and less dressing time.

WA200–1LH	Wheel adapter O.D. 2–¼"	$60

PRICES SUBJECT TO CHANGE WITHOUT NOTICE.
EFFECTIVE JANUARY 2023 • VISA/MASTERCARD ACCEPTED

P.O. Box 217, 773 Hwy. 105, Palmer Lake, CO 80133
phone: **719-481-4205** fax: 719-488-0872
email: **sales@diacut.com** web: www.diacut.com

RB RESIN BOND

5" DIAMETER SERIES

RESIN BOND Diamond and CBN

Slotting • Slicing • Dicing • Cut-off

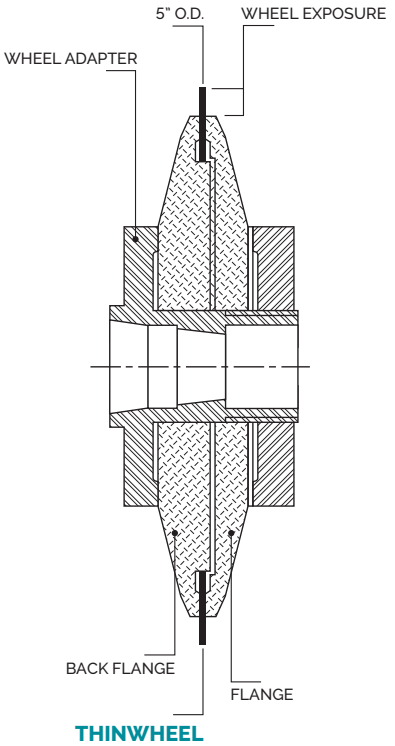

OUTSIDE DIAMETER: 5" INSIDE DIAMETER: 3.5"

Thinwheels available in thickness from .004"–.250" in increments of .001" or a fraction thereof.

Thickness Tolerance: Standard +.0/–.0004" Special +.0/–.0002"

SUPERABRASIVE SOLID TO HOLE

WHEEL THICKNESS	TOLERANCE	DIAMOND	CBN
.004"-.006"	Special	$ 162.00	NA
.007"-.009"	Standard	$ 148.00	$ 183.00
	Special	$ 161.00	$ 195.00
.010"-.025"	Standard	$ 137.00	$ 165.00
	Special	$ 148.00	$ 179.00
.026"-.050"	Standard	$ 165.00	$ 222.00
	Special	$ 167.00	$ 234.00
.051"-.075"	Standard	$ 192.00	$ 269.00
	Special	$ 205.00	$ 282.00
.076"-.100"	Standard	$ 214.00	$ 312.00
	Special	$ 227.00	$ 325.00
.101"-.125"	Standard	$ 224.00	$ 350.00
	Special	$ 236.00	$ 362.00
.126"-.150"	Standard	$ 251.00	$ 381.00
	Special	$ 263.00	$ 393.00
.151"-.175"	Standard	$ 264.00	$ 407.00
	Special	$ 278.00	$ 418.00
.176"-.200"	Standard	$ 277.00	$ 427.00
	Special	$ 289.00	$ 439.00
.201"-.225"	Standard	$ 284.00	$ 444.00
	Special	$ 296.00	$ 457.00
.226"-.250"	Standard	$ 289.00	$ 449.00
	Special	$ 301.00	$ 461.00

NOTE: Add 10% for Copper Bond (RLE)

1A8 FLANGES FOR 5" THINWHEEL

A special Diacut flange must be used with the 5" Thinwheel.

PART NO.	DIAMETER	WHEEL EXPOSURE	PRICE
F1A8-575	4.75"	.125"	$113
F1A8-560	4.60"	.200"	$108
F1A8-545	4.45"	.275"	$106
F1A8-530	4.30"	.350"	$104
F1A8-515	4.15"	.425"	$99
F1A8-500	4.00"	.500"	$97
FS500	Complete set of flanges		$580

Flange thickness for 5" Thinwheel is .650"
Standard hole size for all flanges is 1.25"
Special hole size– add $10
WHEEL EXPOSURE NOT TO EXCEED 15 TIMES THE THICKNESS OF THE BLADE

WHEEL ADAPTERS

Keep grinding wheels mounted for longer wheel life and less dressing time.

WA200–1LH	Wheel adapter O.D. 2–¼"	$60

PRICES SUBJECT TO CHANGE WITHOUT NOTICE.
EFFECTIVE JANUARY 2023 • VISA/MASTERCARD ACCEPTED

P.O. Box 217, 773 Hwy. 105, Palmer Lake, CO 80133
phone: **719-481-4205** fax: 719-488-0872
email: **sales@diacut.com** web: www.diacut.com

RB RESIN BOND

6" DIAMETER SERIES

RESIN BOND Diamond and CBN

Slotting • Slicing • Dicing • Cut-off

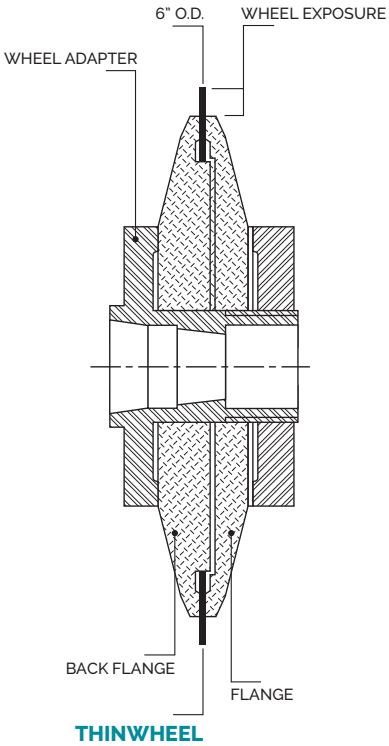

OUTSIDE DIAMETER: 6" INSIDE DIAMETER: 4.5"

Thinwheels available in thickness from .004"–.250" in increments of .001" or a fraction thereof.

Thickness Tolerance: Standard +.0/–.0004" Special +.0/–.0002"

SUPERABRASIVE SOLID TO HOLE

WHEEL THICKNESS	TOLERANCE	DIAMOND	CBN
.004"-.006"	Special	$ 178.00	NA
.007"-.009"	Standard	$ 161.00	$ 205.00
	Special	$ 176.00	$ 218.00
.010"-.025"	Standard	$ 148.00	$ 187.00
	Special	$ 163.00	$ 202.00
.026"-.050"	Standard	$ 183.00	$ 252.00
	Special	$ 197.00	$ 267.00
.051"-.075"	Standard	$ 215.00	$ 312.00
	Special	$ 230.00	$ 327.00
.076"-.100"	Standard	$ 242.00	$ 362.00
	Special	$ 258.00	$ 379.00
.101"-.125"	Standard	$ 266.00	$ 410.00
	Special	$ 281.00	$ 449.00
.126"-.150"	Standard	$ 284.00	$ 446.00
	Special	$300.00	$ 462.00
.151"-.175"	Standard	$ 303.00	$ 479.00
	Special	$ 317.00	$ 493.00
.176"-.200"	Standard	$ 316.00	$ 503.00
	Special	$ 332.00	$ 517.00
.201"-.225"	Standard	$ 327.00	$ 519.00
	Special	$ 341.00	$ 534.00
.226"-.250"	Standard	$ 333.00	$ 528.00
	Special	$ 347.00	$ 543.00

NOTE: Add 10% for Copper Bond (RLE)

1A8 FLANGES FOR 6" THINWHEEL

A special Diacut flange must be used with the 6" Thinwheel.

PART NO.	DIAMETER	WHEEL EXPOSURE	PRICE
F1A8-675	5.75"	.125"	$135
F1A8-660	5.60"	.200"	$132
F1A8-645	5.45"	.275"	$130
F1A8-630	5.30"	.350"	$128
F1A8-615	5.15"	.425"	$125
F1A8-600	5.00"	.500"	$123
FS600	Complete set of flanges		$729

Flange thickness for 6" Thinwheel is .700"
Standard hole size for all flanges is 1.25"
Special hole size– add $10
WHEEL EXPOSURE NOT TO EXCEED 15 TIMES THE THICKNESS OF THE BLADE

WHEEL ADAPTERS

Keep grinding wheels mounted for longer wheel life and less dressing time.

WA130–LH	Wheel adapter O.D. 3"	$165

PRICES SUBJECT TO CHANGE WITHOUT NOTICE.
EFFECTIVE JANUARY 2023 • VISA/MASTERCARD ACCEPTED

P.O. Box 217, 773 Hwy. 105, Palmer Lake, CO 80133
phone: **719-481-4205** fax: 719-488-0872
email: **sales@diacut.com** web: www.diacut.com

RB RESIN BOND

7" DIAMETER SERIES

RESIN BOND Diamond and CBN

Slotting • Slicing • Dicing • Cut-off

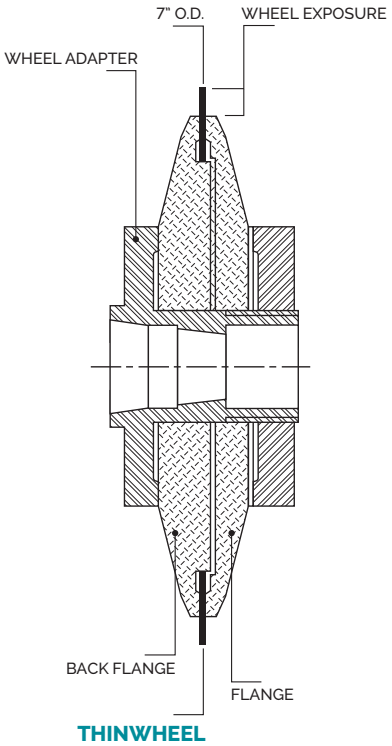

OUTSIDE DIAMETER: 7" INSIDE DIAMETER: 5.5"

Thinwheels available in thickness from .004"–.250" in increments of .001" or a fraction thereof.

Thickness Tolerance: Standard +.0/–.0004" Special +.0/–.0002"

SUPERABRASIVE SOLID TO HOLE

WHEEL THICKNESS	TOLERANCE	DIAMOND	CBN
.010"-.025"	Standard	$ 168.00	$ 211.00
	Special	$ 185.00	$ 228.00
.026"-.050"	Standard	$ 209.00	$ 296.00
	Special	$ 227.00	$ 314.00
.051"-.075"	Standard	$ 246.00	$ 361.00
	Special	$ 263.00	$ 379.00
.076"-.100"	Standard	$ 279.00	$ 424.00
	Special	$ 295.00	$ 440.00
.101"-.125"	Standard	$ 306.00	$ 477.00
	Special	$ 323.00	$ 493.00
.126"-.150"	Standard	$ 330.00	$ 523.00
	Special	$ 347.00	$ 538.00
.151"-.175"	Standard	$ 349.00	$ 558.00
	Special	$ 366.00	$ 576.00
.176"-.200"	Standard	$ 365.00	$ 586.00
	Special	$ 382.00	$ 603.00
.201"-.225"	Standard	$ 377.00	$ 605.00
	Special	$ 393.00	$ 624.00
.226"-.250"	Standard	$ 382.00	$ 616.00
	Special	$400.00	$ 634.00

NOTE: Add 10% for Copper Bond (RLE)

PRICES SUBJECT TO CHANGE WITHOUT NOTICE.
EFFECTIVE JANUARY 2023
VISA/MASTERCARD ACCEPTED

1A8 FLANGES FOR 7" THINWHEEL

A special Diacut flange must be used with the 7" Thinwheel.

PART NO.	DIAMETER	WHEEL EXPOSURE	PRICE
F1A8-775	6.75"	.125"	$168
F1A8-760	6.60"	.200"	$164
F1A8-745	6.45"	.275"	$161
F1A8-730	6.30"	.350"	$158
F1A8-715	6.15"	.425"	$154
F1A8-700	6.00"	.500"	$149
FS700	Complete set of flanges		$890

Flange thickness for 7" Thinwheel is .750"
Standard hole size for all flanges is 1.25"
Special hole size– add $10
WHEEL EXPOSURE NOT TO EXCEED 15 TIMES THE THICKNESS OF THE BLADE

WHEEL ADAPTERS

Keep grinding wheels mounted for longer wheel life and less dressing time.

WA130–LH	Wheel adapter O.D. 3"	$165

P.O. Box 217, 773 Hwy. 105, Palmer Lake, CO 80133
phone: **719-481-4205** fax: 719-488-0872
email: **sales@diacut.com** web: www.diacut.com

RB RESIN BOND

8" DIAMETER SERIES

RESIN BOND Diamond and CBN

Slotting • Slicing • Dicing • Cut-off

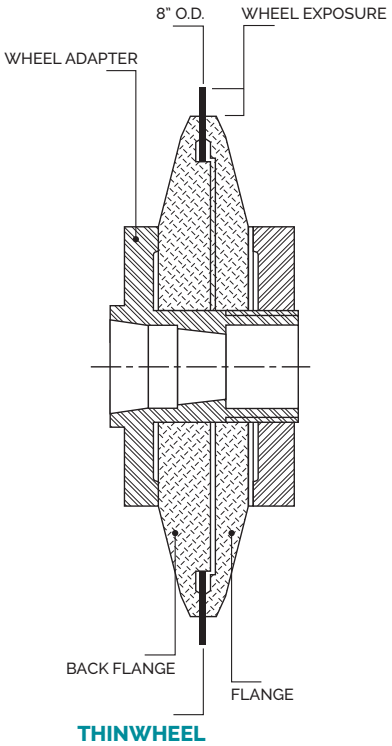

OUTSIDE DIAMETER: 8" INSIDE DIAMETER: 6.5"

Thinwheels available in thickness from .010"–.250" in increments of .001" or a fraction thereof.

Thickness Tolerance: Standard +.0/–.001" Special +.0/–.0005"

SUPERABRASIVE SOLID TO HOLE

WHEEL THICKNESS	TOLERANCE	DIAMOND	CBN
.010"-.025"	Standard	$ 198.00	$ 248.00
	Special	$ 216.00	$ 268.00
.026"-.050"	Standard	$ 234.00	$ 328.00
	Special	$ 255.00	$ 347.00
.051"-.075"	Standard	$ 277.00	$ 410.00
	Special	$ 295.00	$ 429.00
.076"-.100"	Standard	$ 313.00	$ 481.00
	Special	$ 333.00	$ 501.00
.101"-.125"	Standard	$ 345.00	$ 543.00
	Special	$ 365.00	$ 563.00
.126"-.150"	Standard	$ 372.00	$ 594.00
	Special	$ 392.00	$ 614.00
.151"-.175"	Standard	$ 394.00	$ 636.00
	Special	$ 414.00	$ 656.00
.176"-.200"	Standard	$ 412.00	$ 668.00
	Special	$ 432.00	$ 688.00
.201"-.225"	Standard	$ 425.00	$ 691.00
	Special	$ 444.00	$ 711.00
.226"-.250"	Standard	$ 434.00	$ 703.00
	Special	$ 457.00	$ 723.00

NOTE: Add 10% for Copper Bond (RLE)

PRICES SUBJECT TO CHANGE WITHOUT NOTICE.
EFFECTIVE JANUARY 2023
VISA/MASTERCARD ACCEPTED

1A8 FLANGES FOR 8" THINWHEEL

A special Diacut flange must be used with the 8" Thinwheel.

PART NO.	DIAMETER	WHEEL EXPOSURE	PRICE
F1A8-875	7.75"	.125"	$197
F1A8-860	7.60"	.200"	$194
F1A8-845	7.45"	.275"	$191
F1A8-830	7.30"	.350"	$187
F1A8-815	7.15"	.425"	$183
F1A8-800	7.00"	.500"	$180
FS800	Complete set of flanges		$1,070

Flange thickness for 8" Thinwheel is .800"
Standard hole size for all flanges is 1.25"
Special hole size– add $10
WHEEL EXPOSURE NOT TO EXCEED 15 TIMES THE THICKNESS OF THE BLADE

WHEEL ADAPTERS

Keep grinding wheels mounted for longer wheel life and less dressing time.

WA130–LH	Wheel adapter O.D. 3"	$165

P.O. Box 217, 773 Hwy. 105, Palmer Lake, CO 80133
phone: **719-481-4205** fax: 719-488-0872
email: **sales@diacut.com** web: www.diacut.com

RB RESIN BOND

10" DIAMETER SERIES

RESIN BOND Diamond and CBN

Slotting • Slicing • Dicing • Cut-off

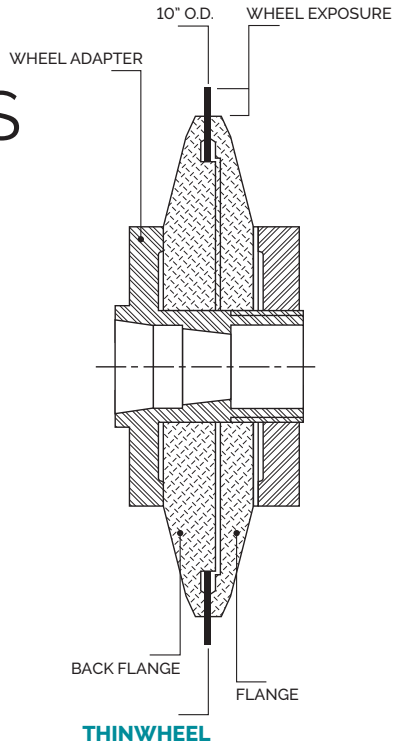

OUTSIDE DIAMETER: 10" INSIDE DIAMETER: 8.5"

Thinwheels available in thickness from .010"–.250" in increments of .001" or a fraction thereof.

Thickness Tolerance: Standard +.0/–.001" Special +.0/–.0005"

SUPERABRASIVE SOLID TO HOLE

WHEEL THICKNESS	TOLERANCE	DIAMOND	CBN
.010"-.025"	Standard	ON REQUEST	
	Special	ON REQUEST	
.026"-.050"	Standard	$ 314.00	$ 465.00
	Special	$ 339.00	$ 490.00
.051"-.075"	Standard	$ 345.00	$ 525.00
	Special	$ 369.00	$ 549.00
.076"-.100"	Standard	$ 392.00	$ 621.00
	Special	$ 417.00	$ 646.00
.101"-.125"	Standard	$ 437.00	$ 706.00
	Special	$ 462.00	$ 731.00
.126"-.150"	Standard	$ 476.00	$ 778.00
	Special	$ 500.00	$ 802.00
.151"-.175"	Standard	$ 506.00	$ 836.00
	Special	$ 531.00	$ 861.00
.176"-.200"	Standard	$ 531.00	$ 882.00
	Special	$ 555.00	$ 907.00
.201"-.225"	Standard	$ 549.00	$ 922.00
	Special	$ 599.00	$ 948.00
.226"-.250"	Standard	$ 560.00	$ 938.00
	Special	$ 709.00	$ 963.00

NOTE: Add 10% for Copper Bond (RLE)

PRICES SUBJECT TO CHANGE WITHOUT NOTICE.
EFFECTIVE JANUARY 2023
VISA/MASTERCARD ACCEPTED

1A8 FLANGES FOR 10" THINWHEEL

A special Diacut flange must be used with the 10" Thinwheel.

PART NO.	DIAMETER	WHEEL EXPOSURE	PRICE
F1A8-1075	9.75"	.125"	$318
F1A8-1060	9.60"	.200"	$313
F1A8-1045	9.45"	.275"	$307
F1A8-1030	9.30"	.350"	$301
F1A8-1015	9.15"	.425"	$295
F1A8-1000	9.00"	.500"	$290

Flange thickness for 10" Thinwheel is 1"
Standard hole size for all flanges is 1.25"
Special hole size– add $10
WHEEL EXPOSURE NOT TO EXCEED 15 TIMES THE THICKNESS OF THE BLADE

WHEEL ADAPTERS

Keep grinding wheels mounted for longer wheel life and less dressing time.